HF12864-16

SHANGHAI HENGFANG ELECTRONIC CO.,LTD
Address:上海市北京东路668号 赛格电子 2A13 B318
Tel:021-53085818 53081376 51571718
FAX:021-53085818 Postcode:200010
E-Mail:wanghx70@163.com Http://www.hengfang.com.cn

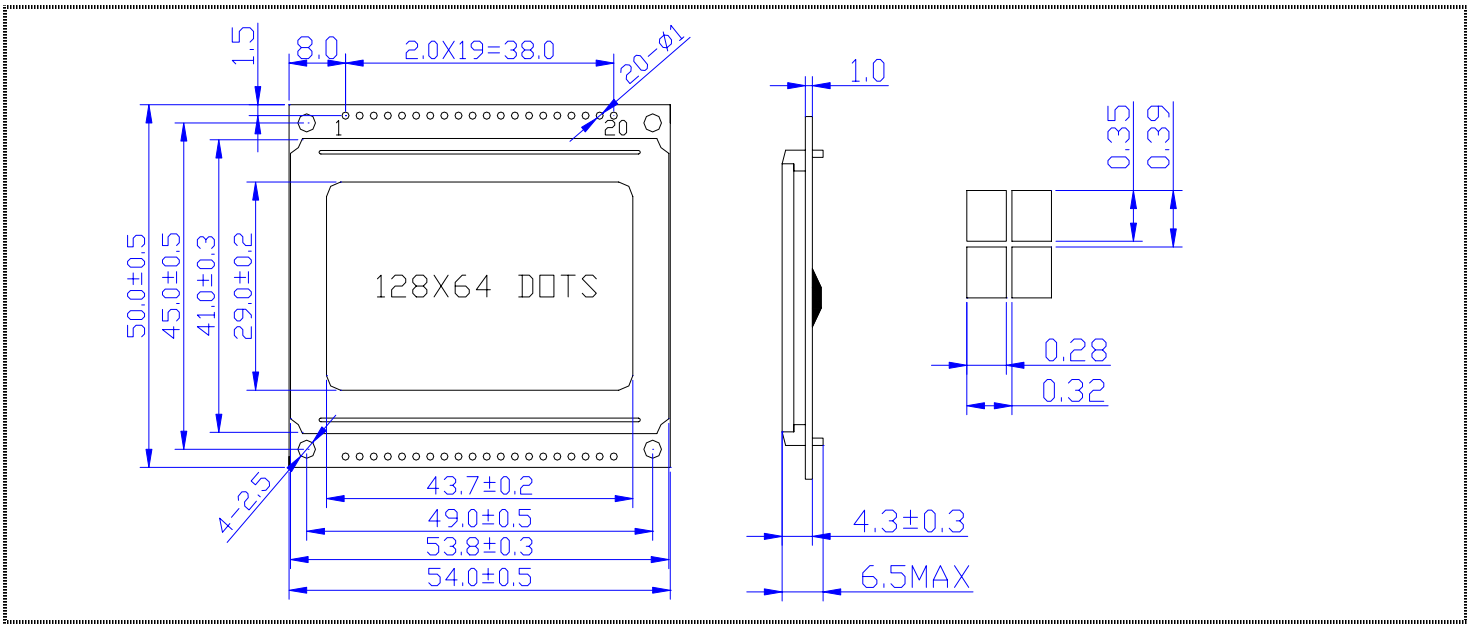

MECHANICAL DATA

Item	Nominal Dimensions	Unit
Module Size(W×H×T)	54.0×50.0×6.5	mm
Viewing Area(W×H)	43.7×29.0	mm
Dot Pitch(W×H)	0.32×0.39	mm
Dot Size(W×H)	0.28×0.35	mm

ABSOLUTE MAXIMUM RATINGS

Item	Symbol	Min	Type	Max	Unit
Operating Voltage	VDD	4.5	5.0	5.5	V
Operating Current	IDD	3.2	4.0	4.5	mA
LED Voltage	V_{LED}	4.5	5.0	5.5	V
LED Current	I_{LED}	15	20	26	mA
Operating Temp.	Topr	-20	—	+70	℃
Storage Temp.	Tsto	-30	—	+80	℃

ELECTRICAL CHARACTERISTICS

Item	Symbol	Min	Type	Max	Unit
Input Hight Voltage	V_{IH}	0.7VDD	—	VDD	V
Input Low Voltage	V_{IL}	0	—	0.3VDD	V
Output Hight Voltage	V_{OH}	2.4	—	VDD	V
Output Low Voltage	V_{OL}	0	—	0.4	V

PIN CONNECTIONS

PIN	Symbol	Level	Function
1	GND	—	GND(0V)
2	VDD	—	Supply Voltage for Logic(+5V)
3	V0	—	Power Supply for LCD
4	D/I	H/L	H: Data ; L: Instruction Code
5	R/W	H/L	H: Read; L: Write
6	E	H/L	Enable signal
7	D0	H/L	Data Bus Line
8	D1	H/L	
9	D2	H/L	
10	D3	H/L	
11	D4	H/L	
12	D5	H/L	
13	D6	H/L	
14	D7	H/L	
15	CS1	H	H:Chip Selection For Left Screen
16	CS2	H	H:Chip Selection For Right Screen
17	/RES	L	Reset Signal (Active LOW)
18	VEE	—	Negative Voltage to LCD
19	SW	—	EL Switch (Connected to VDD is Enable)
20	NC	—	NO Connect

BLOCK DIAGRAM

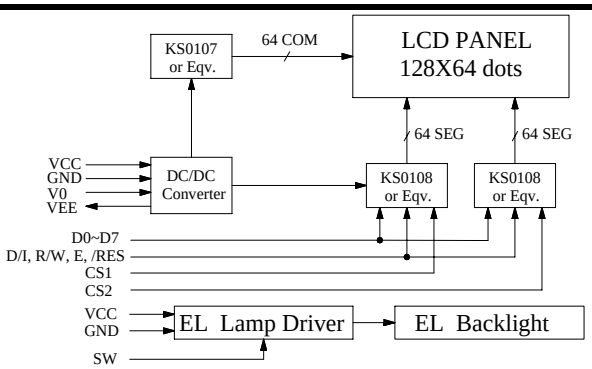
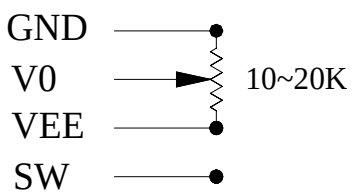
POWER SUPPLY